MC 1050-20T

TRACK CONVEYOR

A leading manufacturer of screening and conveyor equipment, offer the MC1050-20T tracked stacking conveyor, ensuring regular & consistent feed the MC1050-20T is the ideal solution for jobs that require high production stockpiling or material transfer

WORKING POSITION

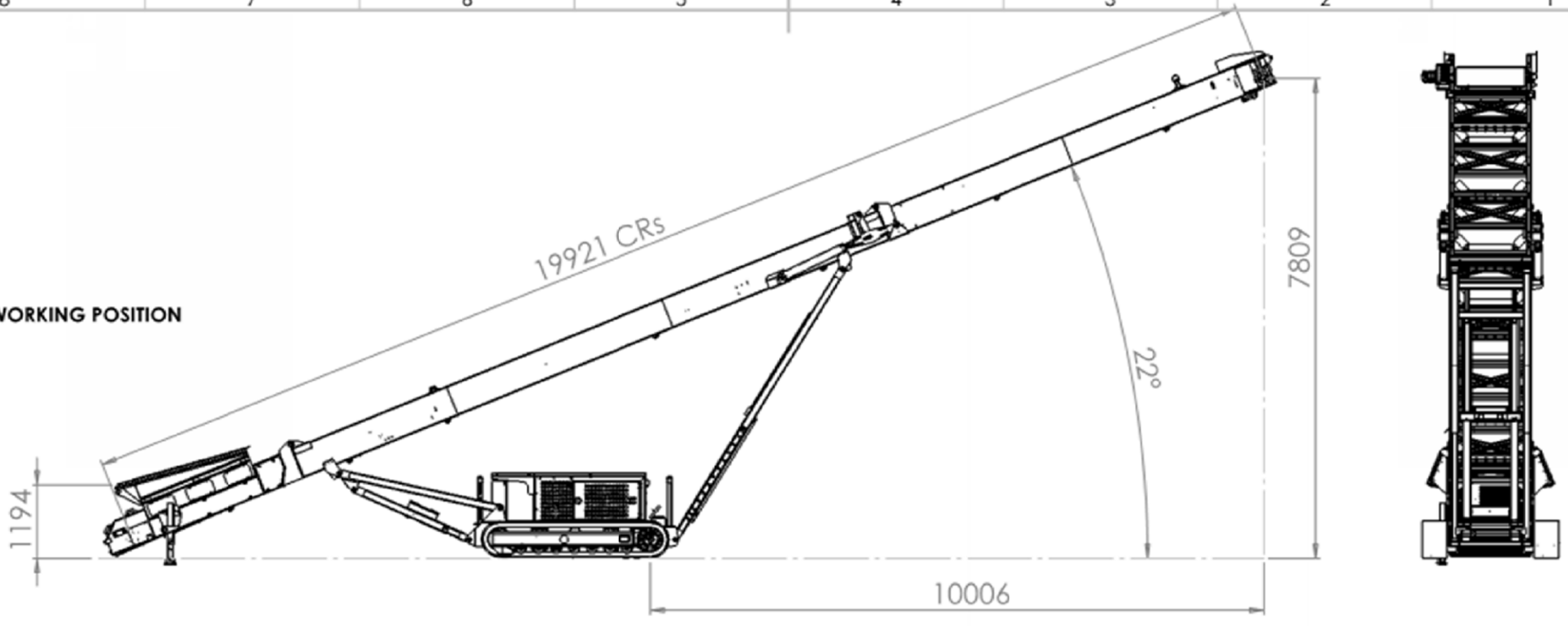

TRANSPORT POSITION

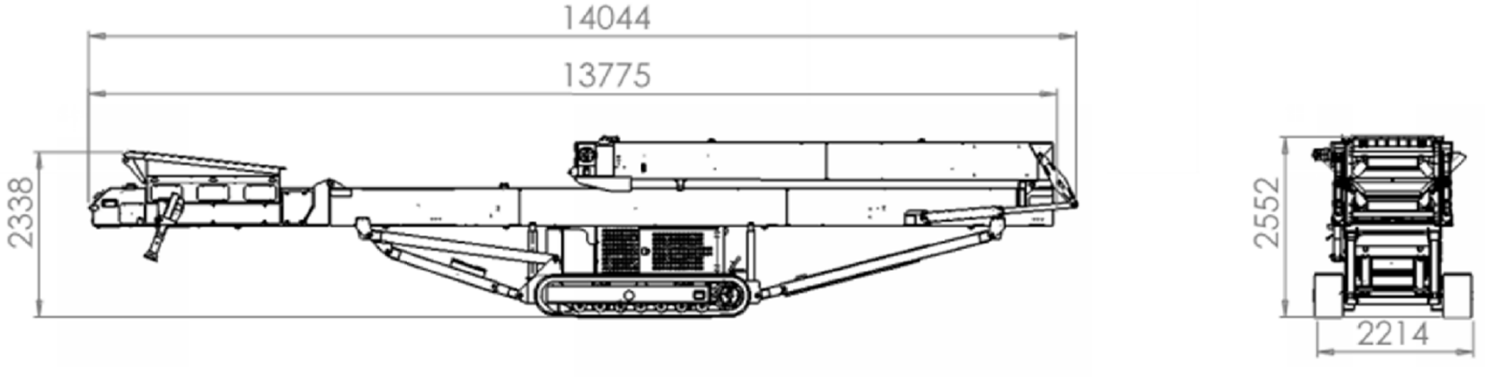

UNLESS OTHERWISE SPECIFIED: DIMENSIONS ARE IN MILLIMETERS SURFACE FINISH: TOLERANCES: LINEAR: ANGULAR:		FINISH:		DEBURR AND BREAK SHARP EDGES	DO NOT SCALE DRAWING	REVISION	
	NAME	SIGNATURE	DATE		TITLE: Tier4 Engine		
DRAWN							
CHK'D							
APPV'D							
MFG							
Q.A.				MATERIAL:	DWG NO. IMS-19174-Tier4	A3	
				WEIGHT:	SCALE:1:70	SHEET 1 OF 1	

Heavy Duty Construction

Constructed from 5mm thick MS plate designed in 500mm (20”) deep section to give added stability and to withstand the rigours of heavy duty operation

Conveyor

The conveyor is constructed in 3 sections , the tail section includes a generous feed hopper and the head section includes the conveyor drive , consisting of a Sauer-Danfoss hydraulic motor and rubber lagged drive pulley

Diesel-Hydraulic Power Unit

The conveyor is powered by a Tier 4 38 kw Diesel Engine coupled to a tandem hydraulic pump giving sufficient oil flow to drive both the conveyor at maximum output and to operate the crawler tracks

Undercarriage

The undercarriage consists of the hydraulically operated crawler tracks together with an adjustable support trestle arrangement, which allows variation in both feed and discharge heights

Hydraulic Folding Mechanism

The folding mechanism of the conveyor head section allows for quick site set up and provides a flexible approach to transport of the unit. The hydraulic folding is designed so that the hydraulic cylinder piston rods are fully protected when the machine is operational

Emergency Stop System

Every MC1050-20T track Conveyor is equipped from the factory with an emergency stop system that will render the plant inoperable when activated, providing added safety for the operator.

Standard Features

Crawler Track Movement

38kw Diesel-Hydraulic Drive

1050mm (42”) wide 3 ply belt

Hydraulic Folding on Head Section

Hydraulic Raise and Lower

Manual Folding of Tail Section

Options

Hydraulic Folding of Tail Section

Heavy Duty Belt

Chevron Belt

Dual Hydraulic Drive for increased throughput

Feed Impact Bars

Conveyor Belt Variable Speed Control

Dual Power: Electric & Diesel / Hydraulic Power Unit

PVC covers

Galvanised Steel Covers

Pull Cord Emergency Stops

Feedboot Mild Steel Wear Plates

Feedboot Hardox Wearplates

Feedboot Extensions

Radio Remote Control

Tier 4 Engine USA

Tier 5 Engine EC and UK

Specifications

Operational Length	20M (65’)
Operational Height	8.06M (26’ 6”)
Loading Height	1.2M-3.4M (4’0”-11’3”)
Hydraulic Tank Capacity	320 l (70 gallon)
Diesel Fuel Capacity	155 l (35 gallon)
Engine	Tier 3 Liquid Cooled
Engine Power	38 kw (51 HP)
Transport Width	2.25M (7’ 4”)
Transport Height	2.5M (8’ 2”)
Transport Length	12.2M (40’ 3”)
Total Weight	9560 kgs (21030 lbs)

Due to Irish Manufacturing Services Limited’s policy of continuing product improvements, Specifications are subject to change without notice or obligation. No representation is made that the products depicted herein comply with any laws, codes, rules, regulations or standards. Compliance is the responsibility of the user. Additional safety equipment may be required by the particular location and application of product.

Irish Manufacturing Services Limited

34 Dunroe Road, Clogher, Co. Tyrone, N. Ireland BT76 0Dz

Tel. +44 (0)28 8554 9656 E-mail info@ims-ltd.ie website; www.ims- ltd.ie